EURO NCAP

Van Test 2025

Mercedes-Benz

CITAN.

Panel and Crew van models.

Prices effective from January 2026

Contents

- **Model overview** 3
- **Enhanced Safety** 4
- **Trims**
  - Citan BASE 5
  - Citan PRO 6
  - Citan SELECT 7
  - Citan CREW 8
- **List prices** 9
- **Mercedes-Benz Finance options** 10
- **Colours and Upholstery** 11
- **Equipment** 12
- **Engine and gearbox** 17
- **Fuel consumption** 18
- **Weights and payloads** 18
- **Dimensions** 19
- **The Mercedes-Benz App** 22
- **Approved Used** 23
- **Aftercare** 24

Please note
This document provides information about the model range line-up and specifications of the Citan. It also contains key details about options, economy and performance of all variants. Details are correct at time of publication and are subject to revision. Any images used in this document may not reflect UK specification and are for illustrative purposes only. Images may show optional equipment which does not form part of UK standard specification.

The Mercedes-Benz Citan.

RETURN TO START

2 van models:	Panel van - 2 seats, Crew van - 5 seats
2 vehicle lengths:	L1 or L2 (Crew van available in L2 only)
3 trim levels:	BASE, PRO or SELECT (available on panel vans only)

BASE

PRO

SELECT

CREW

Multifunction steering wheel

MBUX with 9.5-inch touch screen.

Safety and Driver Assistance Systems.

› **The eCitan**

Enhanced Safety.

RETURN TO START

The Citan is based on a sophisticated safety concept. Active driving assistance and safety systems offer useful functions to support the driver. A significantly expanded standard range of assistance systems is available.

Active Lane Keeping Assist (JB4)
The Lane Keeping Assist function can help to prevent accidents caused by the vehicle unintentionally leaving its lane. If the system detects that the vehicle has drifted out of its lane unintentionally and warns the driver by means of a pulsating vibration of the steering wheel. This prompts the driver to return to the correct lane.

Active Brake Assist (BA3)
Can help you prevent accidents with vehicles in front and with crossing vehicles or pedestrians, or to minimise the consequences of such accidents. This can increase both your own safety and that of other road users.

ATTENTION ASSIST (JQ2)
The ATTENTION ASSIST system can give you timely warning of fatigue and microsleep. Contributes to road safety, especially when driving at night and on longer journeys. The display appears in the instrument cluster between the rev counter and speedometer.

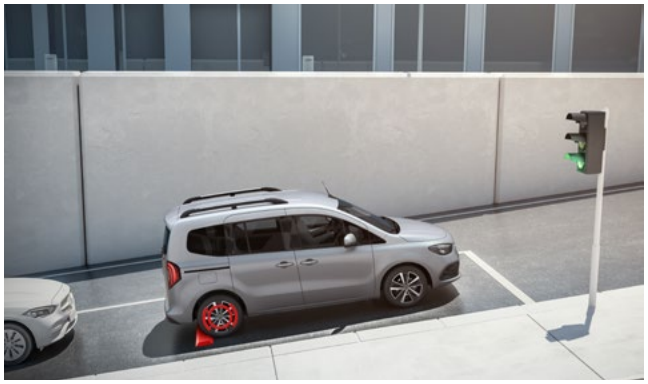

Hill-Start Assist (E07)
Can ease moving off on gradients by temporarily preventing the vehicle from rolling backwards. Hill Start Assist is linked to the Electronic Stability Program ESP® and maintains brake pressure for a few seconds after the service brake is released.

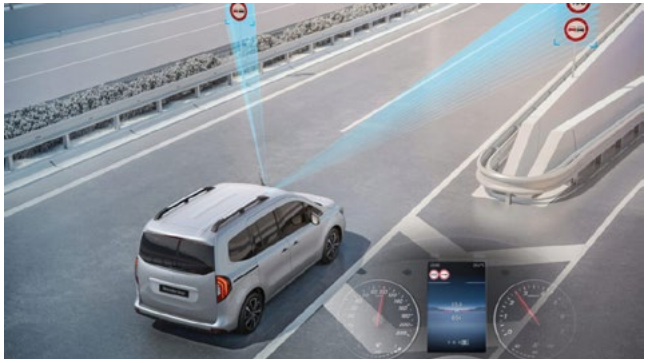

Traffic Sign Assist (JQ1)
Assists you in maintaining the legally prescribed maximum permissible speed. A camera in the windscreen detects speed limits which you then have the option to adopt. So you have less to regulate yourself and can benefit from more comfort.

The Citan BASE.

Standard features include:

Interior

- Multifunction steering wheel
- Height and rake adjustable steering wheel
- Glove compartment with cover, co-driver's side
- Height adjustable driver's seat
- Mirror in driver's sunblind
- Air-conditioning system

Exterior

- Sliding door left (and right on L2s)
- Exterior mirrors, heated and electronically adjustable
- 16-inch steel wheels with hub caps
- Double-wing rear door without window, opening 180 degrees
- Halogen headlamps
- Enhanced payload

Safety and Driver Assistance Systems

- Rearview camera
- Rear parking aid
- Active Lane Keeping Assist
- Traffic Sign Assist
- Active Brake Assist
- Tyre pressure monitoring front/rear, wireless
- Driver and co-driver's airbag
- ATTENTION ASSIST
- Hill-start Assist
- Alarm and double locks

Technology

- MBUX multimedia system with 9.5-inch display
- Digital Extra: Smartphone Integration
- Cruise Control

From £21,575* List price exc VAT

* Based on a 110 Van L1 BASE.

2 lengths available

- L1: 4,498mm
- L2: 4,922mm

Transmission

- 6-speed manual

Arrange a test drive at your nearest Dealership

The Citan PRO.

Upgrade from BASE to PRO to get all of the additional equipment listed below:

Interior

- LED Interior lighting
- Electric front windows with one-touch operation
- Armrest with stowage compartment
- Height adjustable co-driver's seat
- Height adjustable driver's seat with lumbar support

Exterior

- Sliding door rail cover in vehicle colour
- Folding exterior mirrors, heated and electronically adjustable
- 16-inch 5-twin-spoke design wheels on L1 (steel wheels with wheel trim on L2)
- Front fog lamps

Load Area

- LED lighting in load compartment
- Plastic flooring in load compartment

Safety and Driver Assistance Systems

- Blind Spot Assist

From £23,365* List price exc VAT

* Based on a 110 Van L1 PRO.

2 lengths available

- L1: 4,498mm
- L2: 4,922mm

Transmissions available

- 6-speed manual with 110 engine
- 7-speed automatic with 112 engine only

› **Arrange a test drive at your nearest Dealership**

The Citan SELECT.

Upgrade from PRO to SELECT to get all of the additional equipment listed below:

Interior

- Interior Design package
- Chrome interior package
- High-gloss black dashboard trim element
- Leather steering wheel and shift lever knob

Exterior

- LED High Performance headlamps
- 16-inch 10-spoke light-alloy wheels on L1 (multi-spoke alloy wheels on L2)
- LED Fog lamps
- Metallic paint
- Painted bumpers

Safety and Driver Assistance Systems

- Highbeam Assist
- Active parking assist
- KEYLESS-GO

From £25,300* List price exc VAT

* Based on a 110 Van L1 SELECT.

2 lengths available

- L1: 4,498mm
- L2: 4,922mm

Transmissions available

- 6-speed manual with 110 engine
- 7-speed automatic with 112 engine only

Arrange a test drive at your nearest Dealership

The Citan CREW.

Standard features include:

Interior

- LED interior lighting
- Electric front windows with one-touch operation
- Armrest with stowage compartment
- FOLD & LOAD rear bench seat with flexible partition wall and protective grille
- Multifunction steering wheel
- Height and rake adjustable steering wheel
- Glove compartment with cover, co-driver's side
- Air-conditioning system

Exterior

- Sliding door rail cover in vehicle colour
- Sliding door left and right with window
- Double-wing rear door without window, opening 180 degrees
- Exterior mirrors heated and electronically adjustable
- 16-inch steel wheels
- Halogen headlamps
- Front fog lamps
- Enhanced payload

Load Area

- LED lighting in load compartment
- Plastic flooring in load compartment

Safety and Driver Assistance Systems

- Rearview camera
- Rear parking aid
- Active Lane Keeping Assist
- Traffic Sign Assist
- Active Brake Assist
- Tyre pressure monitoring front/rear, wireless
- Driver and co-driver's airbag
- ATTENTION ASSIST
- Hill-start Assist
- Alarm and double locks

Technology

- MBUX multimedia system with 9.5-inch display
- Digital Extra: Smartphone Integration
- Cruise Control

From £26,305* List price exc VAT

* Based on a 112 Crew Van L2.

1 length available

- L2: 4,922mm

Transmissions available

- 6-speed manual

Arrange a test drive at your nearest Dealership

List prices.

Model	Transmission	Basic Recommended Retail Price (Ex. VAT)	Basic Recommended Retail Price (Inc. VAT)
Panel Van – BASE			
110 Van L1	Manual	£21,575	£25,890
110 VAN L2	Manual	£22,920	£27,504
Panel Van – PRO			
110 Van L1	Manual	£23,365	£28,038
110 Van L2	Manual	£24,710	£29,652
112 Van L1	Automatic	£25,240	£30,288
Panel Van – SELECT			
110 Van L1	Manual	£25,300	£30,360
110 Van L2	Manual	£26,645	£31,974
112 Van L1	Automatic	£27,175	£32,610
Crew Van			
112 Crew Van L2	Manual	£26,305	£31,566

This document is for guidance only and must be used in conjunction with a configuration tool prior to final specification decisions and vehicle quotations being prepared and accepted. List prices are quoted ex-factory unless otherwise stated. Delivery charges excluding VAT will be added to model prices quoted in this document. Prices based on standard finish paint choice. Mercedes-Benz Vans UK and authorised Dealers reserve the right to alter specification and vary prices without notice. The availability of options may depend on the chosen base vehicle and other optional equipment specified, and should be confirmed with your Mercedes-Benz Vans Dealer prior to order placement. VAT is calculated at the standard rate of 20%. Mercedes-Benz Vans UK Ltd, Tongwell, Milton Keynes MK15 8BA.

Mercedes-Benz Finance options.

Choose an agreement that suits you with Mercedes-Benz Finance.

At Mercedes-Benz Finance we understand what it takes to run a modern-day business. Because of this, we have a number of finance options ready to suit your business needs.

Agility (Personal Contract Plan)

Agility (Personal Contract Plan) is our most flexible method of financing. You drive the vehicle over a fixed term, with fixed monthly payments. And at the end of the agreement, you decide whether you want to:

- Buy another Mercedes-Benz.
- Purchase your van by paying the Optional Purchase payment (balloon) and Option to Purchase Fee.
- Return it to us.

As a business customer, your vehicle can also appear as an asset on your balance sheet.

For more information about Agility.

Hire Purchase

A straightforward route to ownership. This product allows you to spread the overall cost of your Mercedes-Benz over a fixed term.

As a business customer, your vehicle can also appear as an asset on your balance sheet.

For more information on Hire Purchase.

Operating Lease

A solution for those who want to drive one of our vehicles over a specific term, with fixed monthly rentals and without the commitment of ownership of the vehicle.

As a business customer, your vehicle can also appear as an asset on your balance sheet.

For more information on Operating Lease.

Contract Hire

A solution for those who want to drive one of our vans over a specific term, with fixed monthly rentals and without the need to commit to ownership of the vehicle. This includes the cost of your Vehicle Excise Duty (also known as Road Fund Licence) for the duration of your agreement.

As a business customer, your vehicle can also appear as an asset on your balance sheet.

For more information on Contract Hire.

Finance Lease

Finance Lease gives you the ability to enjoy driving a Mercedes-Benz Van for a fixed time without the option of ownership. With this option you lease your vehicle for a fixed period and for fixed monthly rentals.

As a limited company or PLC customer, your vehicle can also appear as an asset on your balance sheet.

For more information on Finance Lease.

For more information about our finance options

Colours and upholstery.

Solid Paints

Arctic white
(Standard on BASE, PRO and Crew)

Lorándite red*

Nosean blue*

Magnetite grey*

Metallic Paints

Helvite silver metallic
(Standard on SELECT)

Limonite yellow metallic*

Chromite grey metallic*

Loparite black metallic*

Cavansite blue metallic*

* Option

Interior upholstery

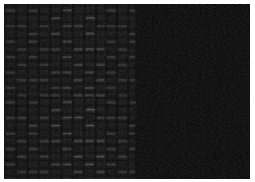

Black Caluma seat upholstery

Model shown may not be UK specification

Equipment (standard and optional overview).

RETURN TO START

Every Citan model comes with a host of standard features, plus a range of optional equipment and packages you can add to enhance your van.

Key: ● Standard ○ Optional — Not available

Category	Option Description	Option code	BASE	PRO	SELECT	CREW	Basic Price exc. VAT	Basic Price inc. VAT
Engine and Drivetrain								
Gearbox	**7-speed automatic transmission** (standard on 112 panel vans only)	G7A	—	●	●	—	—	—
	Transmission, 6-speed, manual (optional on 112 panel vans)	GK6	●	●	●	●	—	—
Exterior Features								
Body	**Metallic paint**	No code	○	○	●	○	£455.00	£546.00
	Painted bumper	CM0	—	○	●	○	£185.00	£222.00
Doors	**Sliding door right** (standard on L2s)	T16	○	○	○	—	£0.00	£0.00
	Sliding door right with window	T17	○	○	○	●	£445.00	£534.00
	Sliding door left with window (only available on L2s)	T20	○	○	○	●	£445.00	£534.00
	Hinged windows in sliding doors (only available on L2s)	W46	○	○	○	●	£0.00	£0.00
	Sliding door left	T19	●	●	●	—	—	—
	Rear door, double-wing, 180 degrees, w/o window	W50	●	●	●	●	—	—
	Tailgate (not available on BASE L2)	W65	○	○	○	—	£150.00	£180.00
	Colour glazing in rear, black glass (only in conjunction with T20 and T17, or W78)	W70	○	○	○	○	£90.00	£108.00
	Window in tailgate/rear door with wipe/wash system	W78	○	○	○	○	£150.00	£180.00
Lighting	**Front fog lamps**	L16	○	●	—	●	£145.00	£174.00
	Fog lamps in LED technology	L23	—	○	●	○	£160.00	£192.00
	Light Package (including: LED High Performance headlamps (LG7), Highbeam Assist (LA1), and Front foglamps)	LB6	○	○	○	○	£845.00	£1,014.00
	LED High Performance headlamps	LG7	○	○	●	○	£730.00	£876.00
	Headlamps featuring halogen technology	L12	●	●	—	●	—	—
Tyres	**All-season tyres**	RM0	○	○	○	—	£180.00	£216.00
	Summer tyres	RM7	●	●	●	●	—	—
	Spare wheel (standard on BASE L2)	R87	●	○	○	○	£95.00	£114.00

Changes to individual option availability and combinations may occur depending on vehicle specification choices and the continuing evolution and adaptation of our product range. These changes may not be immediately reflected in this document as they occur, but will be introduced at the next revision opportunity.

Equipment (standard and optional overview).

RETURN TO START

Category	Option Description	Option code	BASE	PRO	SELECT	CREW	Basic Price exc. VAT	Basic Price inc. VAT
Exterior Features (cont.)								
Wheels	**40.6 cm (16-inch) 10-spoke light-alloy wheels**	R2C	○	○	●	–	£540.00	£648.00
	40.6 cm (16-inch) steel wheels with wheel hub caps	R2D	●	–	○	●	£0.00	£0.00
	40.6 cm (16-inch) steel wheels with wheel trims (standard on PRO L2)	R2E	○	●	○	○	£140.00	£168.00
	40.6 cm (16-inch) 5-twin-spoke design wheels (standard on PRO L1)	R2F	○	●	○	–	£315.00	£378.00
	40.6 cm (16-inch) multi-spoke light-alloy wheels (only available on L2)	R2H	○	○	●	○	£550.00	£660.00
Interior Features								
Floor	**All-weather floormats**	V3L	○	○	○	–	£35.00	£42.00
	Plastic flooring in passenger compartment, front	V4V	●	●	●	●	–	–
Heating and Ventilation	**THERMOTRONIC automatic climate control**	HH4	○	○	○	○	£300.00	£360.00
	Air-conditioning system	H06	●	●	●	●	–	–
Lighting	**Interior lighting in LED technology**	LL1	–	●	●	●	–	–
Mirror	**Mirror in driver's sunblind**	F58	●	●	●	●	–	–
Seats	**Seat heating for driver and co-driver**	H10	○	○	○	○	£300.00	£360.00
	Seat comfort package	SA8	○	○	○	○	£525.00	£630.00
	i-Size child seat securing system	SD1	○	○	○	○	£0.00	£0.00
	Driver's seat, height-adjustable w/ lumbar support	SF6	○	●	●	○	£170.00	£204.00
	Co-driver's seat	SL1	●	○	–	●	£0.00	£0.00
	Co-driver's seat, height-adjustable	SL2	○	●	●	○	£120.00	£144.00
	Driver's seat, height-adjustable	SL3	●	○	–	●	£0.00	£0.00
	Rear bench seats with FOLD & LOAD flexible partition wall	U78	–	–	–	●	–	–
	Fabric Caluma black	VF4	●	●	●	●	–	–

● Standard ○ Optional – Not available

Changes to individual option availability and combinations may occur depending on vehicle specification choices and the continuing evolution and adaptation of our product range. These changes may not be immediately reflected in this document as they occur, but will be introduced at the next revision opportunity.

Equipment (standard and optional overview).

RETURN TO START

Category	Option Description	Option code	BASE	PRO	SELECT	CREW	Basic Price exc. VAT	Basic Price inc. VAT
Interior Features (cont.)								
Steering	**Steering wheel heating**	CK8	—	—	○	—	£140.00	£168.00
	Multifunction steering wheel	C6L	●	●	●	●	—	—
	Height and rake adjustable steering wheel	CL1	●	●	●	●	—	—
	Leather steering wheel	CL3	—	—	●	—	—	—
Storage	**Armrest with stowage compartment**	FG1	○	●	●	●	£100.00	£120.00
	Glove compartment, co-driver's side, closed	FQ3	●	●	●	●	—	—
Trim	**Norwich black fabric**	VH4	○	○	○	○	£55.00	£66.00
	High-gloss black dashboard trim element	FI9	—	—	●	○	—	—
	Chrome interior appointments package	FP4	—	—	●	○	—	—
	Interior Design package (including: High-gloss black dashboard (FI9) and Chrome Interior appointments package (FP4)	PX9	—	—	●	○	—	—
	Shift lever knob, leather	C1J	—	—	●	—	—	—
Window	**Heat-insulating glass all round**	H20	●	●	●	●	—	—
Technology								
Special Edition	**Technology Pack** (including E1K Navigation, EI0 Wireless charging and EZ7 Active parking assist)	Z6J	—	○	—	—	£995.00	£1,194.00
Alternator	**Reinforced alternator**	MA8	○	○	○	○	£350.00	£420.00
Audio Entertainment	**Navigation package**	E1K	○	○	○	○	£690.00	£828.00
	Wireless charging system for mobile devices	EI0	○	○	○	○	£180.00	£216.00
	Digital Extra: MBUX Navigation Plus	EX8	○	○	○	○	£780.00	£936.00
	Digital radio (DAB)	E1D	●	●	●	●	—	—
	MBUX multimedia system with 9.5-inch display	E3O	●	●	●	●	—	—
	Digital Extra: Smartphone Integration (requires pairing of the vehicle with a Mercedes-Benz ID)	E4S	●	●	●	●	—	—
	Pre-installation for Digital Extras	EC5	●	●	●	●	—	—
	Digital Extra: Remote Services Plus	EW6	●	●	●	●	—	—
	Digital Extra: Live Traffic Information	EY2	●	●	●	●	—	—

● Standard ○ Optional — Not available

Changes to individual option availability and combinations may occur depending on vehicle specification choices and the continuing evolution and adaptation of our product range. These changes may not be immediately reflected in this document as they occur, but will be introduced at the next revision opportunity.

Equipment (standard and optional overview).

RETURN TO START

Category	Option Description	Option code	BASE	PRO	SELECT	CREW	Basic Price exc. VAT	Basic Price inc. VAT
Driver assistance	**KEYLESS starting** (standard on 112 L1 and L2 PRO)	FX7	○	○	—	○	£90.00	£108.00
	Instrument cluster with colour display	JK5	●	●	●	●	—	—
	Cruise control	MS1	●	●	●	●	—	—
Safety and Driver assistance								
Airbags	**Automatic co-driver airbag deactivation**	SK5	○	○	○	○	£45.00	£54.00
	Airbag, driver and co-driver	SA4	●	●	●	●	—	—
	Thorax-sidebags and windowbags, front	SH5	●	●	●	●	—	—
Brake	**Electrical parking brake**	B25	○	○	○	○	£220.00	£264.00
Driver assistance	**Windscreen, heated**	F49	○	○	○	○	£180.00	£216.00
	Highbeam Assist	LA1	○	○	●	○	£160.00	£192.00
	Active Brake Assist	BA3	●	●	●	●	—	—
	Hill-Start Assist	E07	●	●	●	●	—	—
	Breakdown management	EY6	●	●	●	●	—	—
	Reversing camera	FR8	●	●	●	●	—	—
	Light and rain sensor	JA5	●	●	●	●	—	—
	Active Lane Keeping Assist	JB4	●	●	●	●	—	—
	Traffic Sign Assist B	JQ1	●	●	●	●	—	—
	ATTENTION ASSIST B	JQ2	●	●	●	●	—	—
	Blind Spot Assist	JP7	—	●	●	●	—	—
	Active Parking Assist	EZ7	—	○	●	○	£305.00	£366.00
	Rear parking aid	F2U	●	●	—	●	—	—
Safety	**First aid kit**	Y10	○	○	○	○	£20.00	£24.00
	Warning triangle	Y44	○	○	○	○	£20.00	£24.00
	TIREFIT	RR7	●	●	●	●	—	—
	Tyre pressure monitoring front/rear, wireless	RY2	●	●	●	●	—	—

● Standard ○ Optional — Not available

Changes to individual option availability and combinations may occur depending on vehicle specification choices and the continuing evolution and adaptation of our product range. These changes may not be immediately reflected in this document as they occur, but will be introduced at the next revision opportunity.

Equipment (standard and optional overview).

RETURN TO START

Category	Option Description	Option code	BASE	PRO	SELECT	CREW	Basic Price exc. VAT	Basic Price inc. VAT
Security	**Double Lock**	FY2	●	●	●	●	–	–
	Alarm – NOT Thatcham Approved	FZ5	●	●	●	●	–	–
Mirrors and Windows								
Mirrors	**Folding exterior mirrors, heated and electronically adjustable**	F59	–	●	●	○	£130.00	£156.00
	Exterior mirrors, heated and electronically adjustable	F68	●	–	–	●	–	–
Window	**Front side windows, electr. w/ one-touch operation**	FE3	–	●	●	●	–	–
Load Area								
Floor	**Plastic flooring in boot/load compartment**	V29	○	●	●	●	£90.00	£108.00
	Wood flooring	V43	○	○	○	–	£265.00	£318.00
Trim	**Load space int. trim up to roof (wood)**	VA2	○	○	○	–	£300.00	£360.00
Loading and Towing								
Bulkhead	**Full-width partition with window**	D51	○	○	○	–	£70.00	£84.00
	Full-length partition	D50	●	●	●	–	–	–
Towing	**Trailer coupling, rigid coupling head**	Q22	○	○	○	○	£505.00	£606.00
Weight variant	**Enhanced payload**	I5B	●	●	●	●	–	–

● Standard ○ Optional – Not available

Changes to individual option availability and combinations may occur depending on vehicle specification choices and the continuing evolution and adaptation of our product range. These changes may not be immediately reflected in this document as they occur, but will be introduced at the next revision opportunity.

Engine and gearbox.

Engine specifications	PANEL 110	PANEL 112	CREW 112
Fuel	Diesel	Diesel	Diesel
Mixture preparation/injection method	Common-rail high-pressure fuel injection	Common-rail high-pressure fuel injection	Common-rail high-pressure fuel injection
Cylinder arrangement	4-cylinder	4-cylinder	4-cylinder
Cubic capacity	1,461cc	1,461cc	1,461cc
EU exhaust emission standard	Euro 6e	Euro 6e	Euro 6e
Output, max.	94 bhp 95 PS	114 bhp 116 PS	114 bhp 116 PS
Torque, max.	260Nm @ 1750rpm	270Nm @ 1750rpm	270Nm @ 1750rpm
Fuel tank capacity	54 litres	54 litres	54 litres
AdBlue® capacity	17.4 litres	17.4 litres	17.4 litres
6-speed manual gearbox	●	○	●
7-speed automatic gearbox	—	●	—
Driven axle	FWD	FWD	FWD

● Standard ○ Optional — Not available

CO_2 emissions and fuel consumption.

RETURN TO START

CO_2 emissions, WLTP (g/km)

Model	Gearbox	Combined	Low-speed	Medium-speed	High-speed	Extra high-speed
110 Van L1 BASE	Manual	136	148	127	117	154
110 Van L1 PRO	Manual	137	148	128	117	154
110 Van L1 SELECT	Manual	137	149	128	117	155
110 Van L2 BASE	Manual	147	165	139	127	162
110 Van L2 PRO	Manual	145	165	139	125	158
110 Van L2 SELECT	Manual	147	165	139	127	161
112 Van L1 PRO	Automatic	140	160	132	119	155
112 Van L1 SELECT	Automatic	140	161	133	119	156
112 Crew Van L2	Manual	147	163	142	129	161

Fuel Consumption, WLTP (l/100km/**MPG**)

Model	Gearbox	Combined	Low-speed	Medium-speed	High-speed	Extra high-speed
110 Van L1 BASE	Manual	5.2/**54.3**	5.6/**50.4**	4.8/**58.9**	4.5/**62.8**	5.9/**47.9**
110 Van L1 PRO	Manual	5.2/**54.3**	5.7/**49.6**	4.9/**57.6**	4.5/**62.8**	5.9/**47.9**
110 Van L1 SELECT	Manual	5.2/**54.3**	5.7/**49.6**	4.9/**57.6**	4.5/**62.8**	6.2/**45.6**
110 Van L2 BASE	Manual	5.6/**50.4**	6.3/**44.8**	5.3/**53.3**	4.8/**58.9**	6.1/**46.3**
110 Van L2 PRO	Manual	5.5/**51.4**	6.3/**44.8**	5.3/**53.3**	4.8/**58.9**	6/**47.1**
110 Van L2 SELECT	Manual	5.6/**50.4**	6.3/**44.8**	5.3/**53.3**	4.8/**58.9**	6.2/**45.6**
112 Van L1 PRO	Automatic	5.3/**53.3**	6.1/**46.3**	5/**56.5**	4.5/**62.8**	5.9/**47.9**
112 Van L1 SELECT	Automatic	5.4/**52.3**	6.1/**46.3**	5.1/**55.4**	4.5/**62.8**	5.9/**47.9**
112 Crew Van L2	Manual	5.6/**50.4**	6.2/**45.6**	5.4/**52.3**	4.9/**57.6**	6.1/**46.3**

All figures are based on a standard specification. The choice of additional factory options may affect CO_2 emissions and corresponding Road Fund Licence. The indicated values were determined according to the prescribed measurement method – Worldwide Harmonised Light Vehicle Test Procedure (WLTP). Figures shown may include options which are not available in the UK. Figures shown are for comparability purposes; only compare with other vans tested to the same technical procedures. Figures may not reflect real life driving results, which will depend upon a number of factors including factory-fitted options, accessories fitted (post registration), variations in weather, driving styles and vehicle load.

Further information about the test used to establish fuel consumption and CO_2 figures can be found at https://www.mercedes-benz.co.uk/vans/en/WLTP

Weights and payloads.

Model	Gearbox	Kerb Weight with Driver (Kg)*	Gross Vehicle Weight (Kg)	Payload (Kg)	Gross Combination Weight (Kg)
110 Van L1 BASE	Manual	1,550	2,230	680	3,500
110 Van L1 PRO	Manual	1,572	2,230	658	3,500
110 Van L1 SELECT	Manual	1,574	2,230	656	3,500

Model	Gearbox	Kerb Weight with Driver (Kg)*	Gross Vehicle Weight (Kg)	Payload (Kg)	Gross Combination Weight (Kg)
110 Van L2 BASE	Manual	1,682	2,536	854	3,500
110 Van L2 PRO	Manual	1,699	2,536	837	3,500
110 Van L2 SELECT	Manual	1,709	2,536	827	3,500
112 Van L1 PRO	Automatic	1,605	2,250	645	3,500
112 Van L1 SELECT	Automatic	1,607	2,250	643	3,500
112 Crew Van L2	Manual	1,761	2,550	789	3,500

* Based on a driver weight of 75kg

Please note: The stated payload weights are correct according to type approval data. The specific payload values for UK supplied vehicles may differ. The figure quoted only accounts for equipment which is included in the UK product offer as standard. Please speak to a franchised Mercedes-Benz Van Dealer for final vehicle configurations and weights once all options and accessories have been added.

Dimensions.

PANEL VAN – BASE/PRO/SELECT L1		
Wheelbase	Wheelbase length	2,716mm
	Turning circle	11.2m
	Front track width	1,585mm
	Rear track width	1,606mm
Vehicle	Length	4,498mm
	Height (unladen)	1,910mm
	Width (inc. wing mirrors)	2,159mm
	Ground clearance	176mm
Load compartment	Length	1,806mm
	Load volume	2.9m³
	Max. width	1,524mm
	Width between wheel arches	1,260mm
	Height	1,256mm

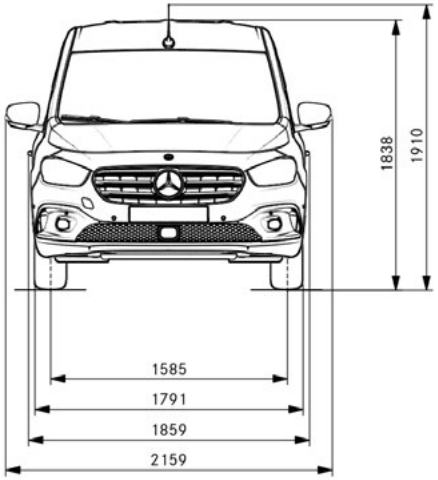

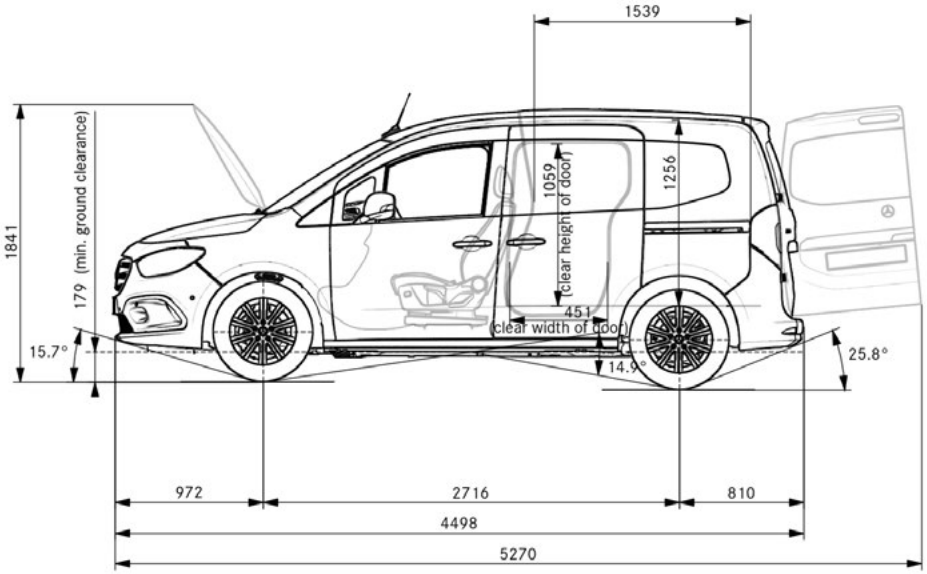

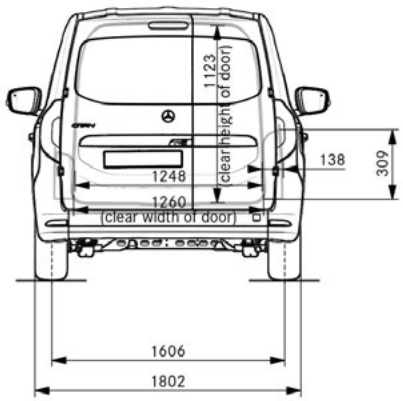

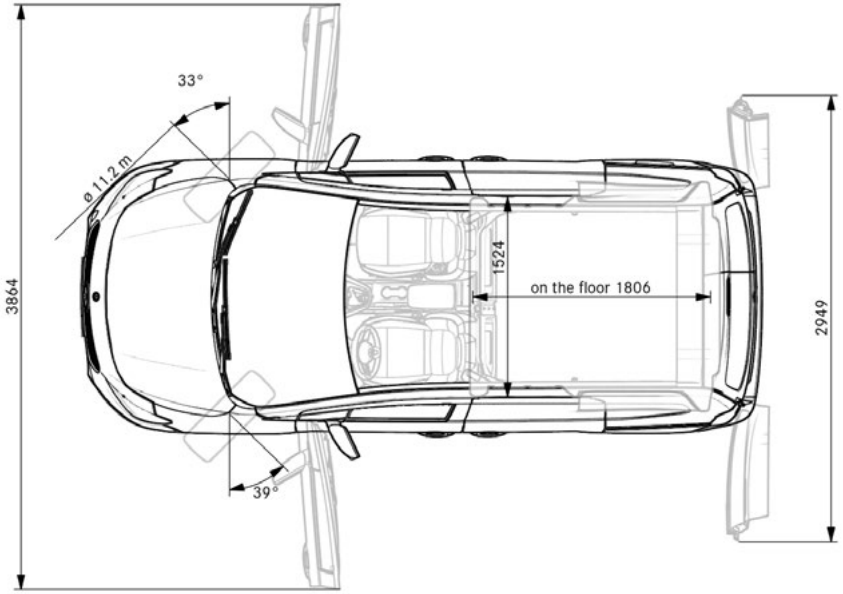

Dimensions.

PANEL VAN – BASE/PRO/SELECT L2		
Wheelbase	Wheelbase length	3,100mm
	Turning circle	13.2m
	Front track width	1,575mm
	Rear track width	1,598mm
Vehicle	Length	4,922mm
	Height (unladen)	1,916mm
	Width (inc. wing mirrors)	2,159mm
	Ground clearance	184mm
Load compartment	Length	2,170mm
	Load volume	3.62m³
	Max. width	1,524mm
	Width between wheel arches	1,260mm
	Height	1,256mm

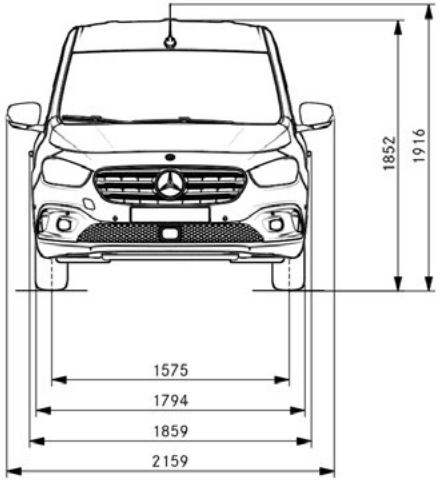

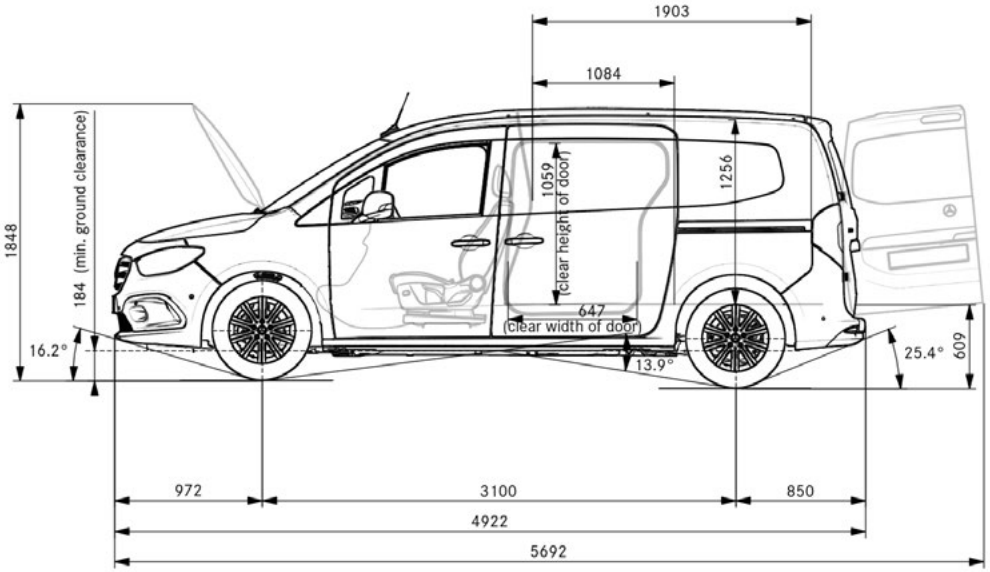

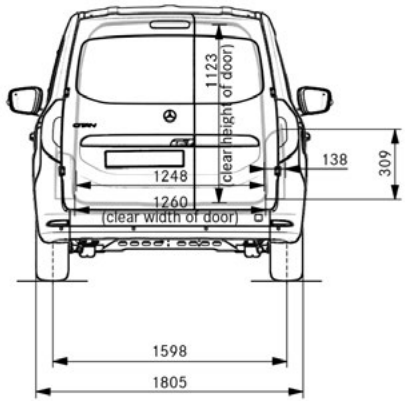

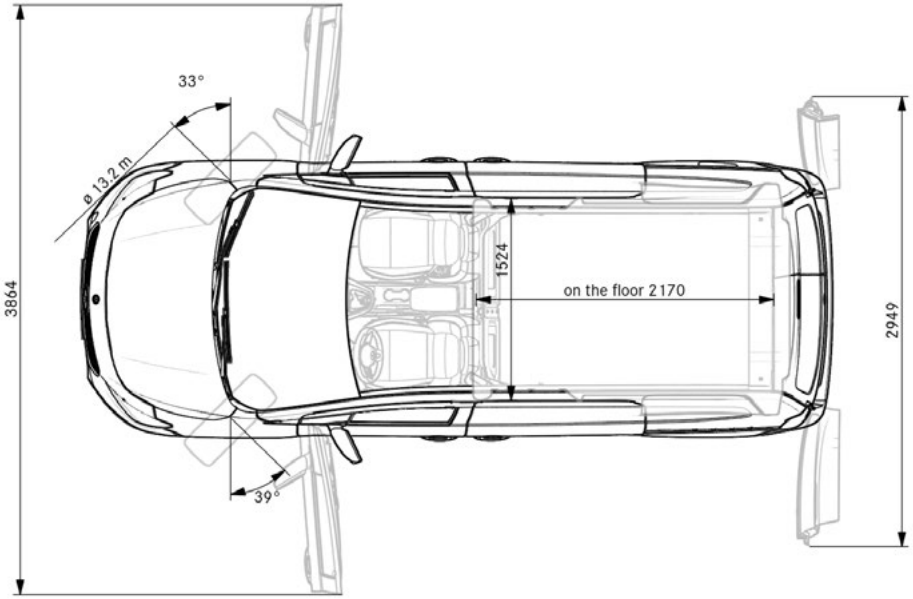

Dimensions.

CREW VAN – L2		
Wheelbase	Wheelbase length	3,100mm
	Turning circle	13.2m
	Front track width	1,575mm
	Rear track width	1,598mm
Vehicle	Length	4,922mm
	Height (unladen)	1,918mm
	Width (inc. wing mirrors)	2,159mm
	Ground clearance	185mm
Load compartment	Length	1,390mm
	Load volume	3.25m³
	Max. width	1,524mm
	Width between wheel arches	1,260mm
	Height	1,256mm

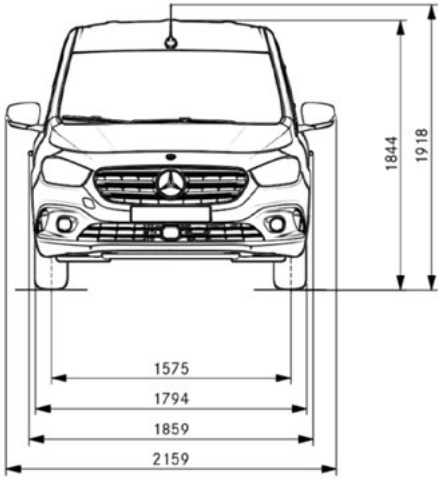

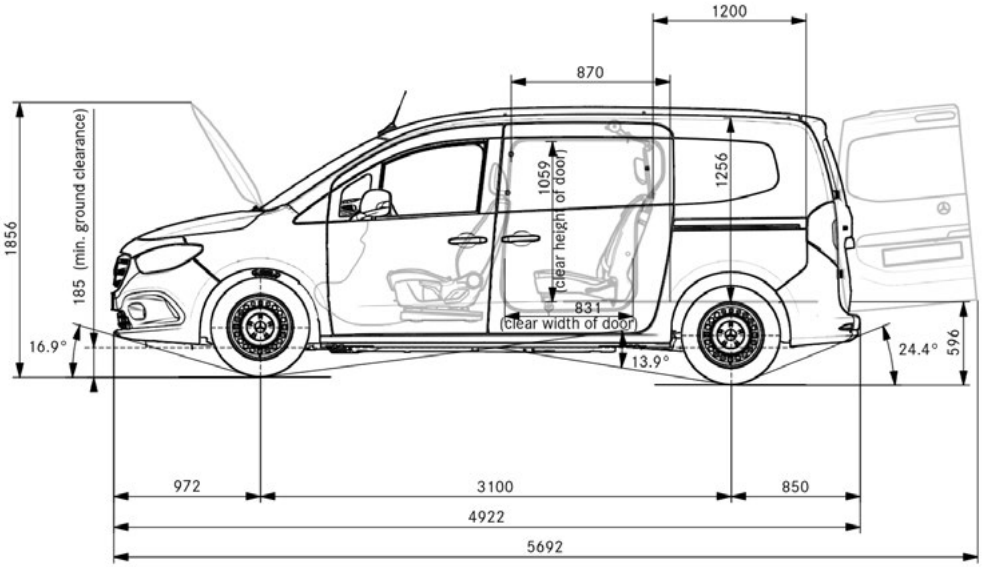

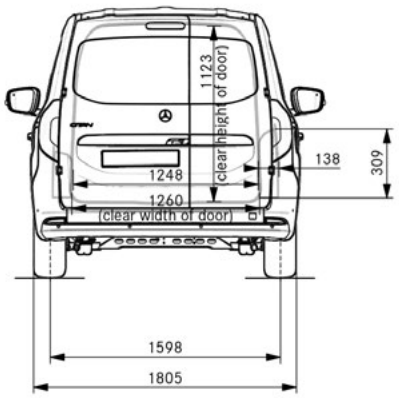

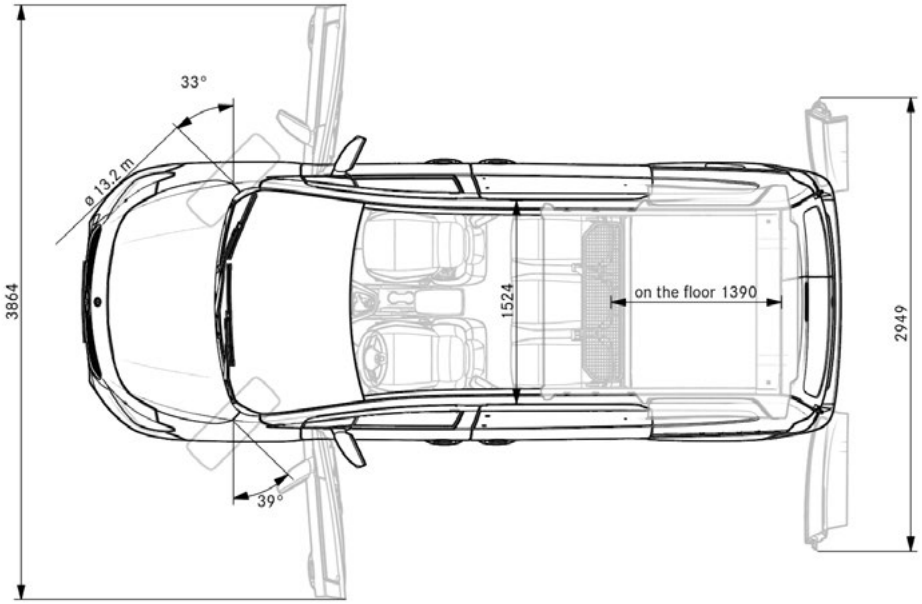

The Mercedes-Benz App.

RETURN TO START

Monitor your van's status, location and security via your smartphone.

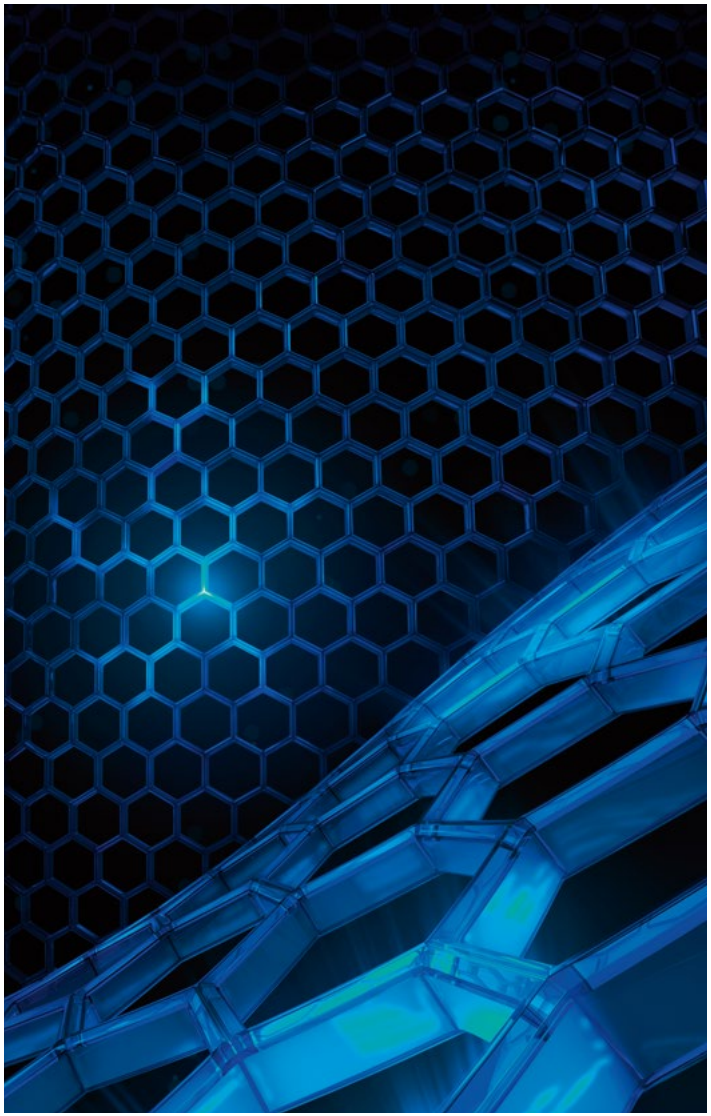

ASSISTANCE & AFTERCARE	FREE
Telediagnostics & Maintenance Management	Receive a notification when wear is detected on diagnostic-capable parts such as brake pads and get advance notice of when a service is due allowing you to plan your workshop visit well in advance to minimise any impact on your business.
Remote Vehicle Diagnostics	Your Dealer can assess your van's condition remotely allowing them to check if any other repairs are required ahead of a service.
Accident Recovery & Breakdown Management	Once an emergency call has been resolved or if you request breakdown assistance, further support is offered to help recover your van or to tow it to a Mercedes-Benz Service outlet.
Software updates	Over-the-air software updates are sent directly to your van's head unit. This means you'll always know your software is up to date and you'll save time by avoiding additional workshop visits.
VEHICLE SUPERVISION	**FREE FOR 3 YEARS**
Vehicle Tracker	See your van's location on the map in your app, making it easy to call or message your driver and re-route them to fit in another delivery or pick-up if a quicker route is available. The tracker is factory fitted equipment so it can't be easily removed if stolen.
Parked Vehicle Locator	If you're within 1 mile of your van's parked location, the app can generate the most convenient walking route – very handy if you're in unfamiliar surroundings and on a busy schedule.
REMOTE ACCESS	**FREE FOR 3 YEARS**
Remote Retrieval of Vehicle Status	Use your app to check on fuel, tyre pressure, mileage and trip information. Not only does this help you plan your day's journeys, it can save you admin time on tasks such as logging your mileage for expenses.
Remote Door Locking & Unlocking	The app allows you to check if your van is locked. If you lock your keys in the van or need to give another driver access, you can do it via the app, from any distance away. For added peace of mind, you'll receive an email notification when your vehicle is unlocked.

Mercedes-Benz Approved Used vans. Get used to more...

RETURN TO START

More choice. More confidence. More quality – and more added extras.

As a Mercedes-Benz Approved Used customer, you'll have complete peace of mind as every van offers the same commitment to quality and workmanship as new and comes with:

12-24 month warranty option*

Free MOT test failure cover** covering you for £1,500

Minimum 3 months MOT

Free 24/7 breakdown cover and roadside assistance^

Comprehensive multi-point vehicle check

Discounted service plans

View our Dealer Networks Approved Used van stock

* Warranty eligible up to 200,000 miles on approved used Mercedes-Benz Vans with less than 150,000 miles at point of sale. For full T&Cs, please speak to your preferred sales representative. ** MOT cover redeemable per 12-months warranty. £1,500 claims limit. For more information, please speak to your preferred sales representative. ^ Free for 12 months initially and renewed at each service, if serviced by MB according to service intervals for up to 30 years from when the vehicle was first registered. For a full list of exclusions and all product terms please visit mbvans.co.uk/mobilovan For full terms and conditions, please consult your local Dealer. Mercedes-Benz Van Insurance is a trading name of Mercedes-Benz Insurance Services UK Limited. Prices are correct at time of going to press 09/2025. All prices are subject to any fiscal or legislative changes.

What is an Approved Used van?

- Is no older than 6 years old
- Has less than 150,000 miles on the clock
- Is eligible for one of our flexible finance plans

Find more information and our latest Approved Used offers

Ready to go electric?

Find our latest Approved Used Electric offers

Service24: Demand more

The most comprehensive Aftercare package – for businesses that demand more.

Our 120-strong Dealer network works around the clock to service and maintain your vans and keep your business moving. It all adds up to more value, more flexibility and more confidence that you'll only find at an authorised Mercedes-Benz Dealer.

Flexible servicing and maintenance

Book your service online or by telephone, and as well as a standard 'drop and go' service with a courtesy van, you'll also get:

- Early bird, late night and weekend slots
- Mobile service
- Overnight service
- Collect & deliver service
- Express 1hr service
- Electric van service.

Find out more about service and repairs

Flexible ways to pay and save

With fixed, transparent national pricing there are no surprises with our services and repairs – plus you can fix, spread and reduce your service and maintenance costs, and ease your cashflow at the same time, with a payment plan.

- Pay as You Go
- ServiceCare Maintenance
- ServiceCare Flex (specifically for fleets)
- ServiceCare Complete.

Find out more about service options

3-year unlimited mileage warranty

Available on every new van, all service and maintenance – and any work required – is covered by your 3-year unlimited mileage warranty, and is only undertaken by Mercedes-Benz trained technicians using Mercedes-Benz GenuineParts.

Find out more about warranties

Free breakdown cover & roadside assistance*

Every van comes with free Europe-wide breakdown cover – MobiloVan. And with 3 years' cover on new vehicles for driver mishaps, no one goes further to keep your business moving.

- Trained technicians using only Mercedes-Benz GenuineParts
- Forward travel of load and crew is covered
- Driver mishap cover for the first 3 years, including out of charge cover or empty fuel tanks.

Find out more about MobiloVan

*For a full list of exclusions and all product terms please visit www.mercedes-benz.co.uk/vans/en/Owners/MobiloVan

January 2026
Mercedes-Benz UK Limited, Delaware Drive, Tongwell, Milton Keynes, MK15 8BA. Company number: 02448457
www.mercedes-benz.co.uk